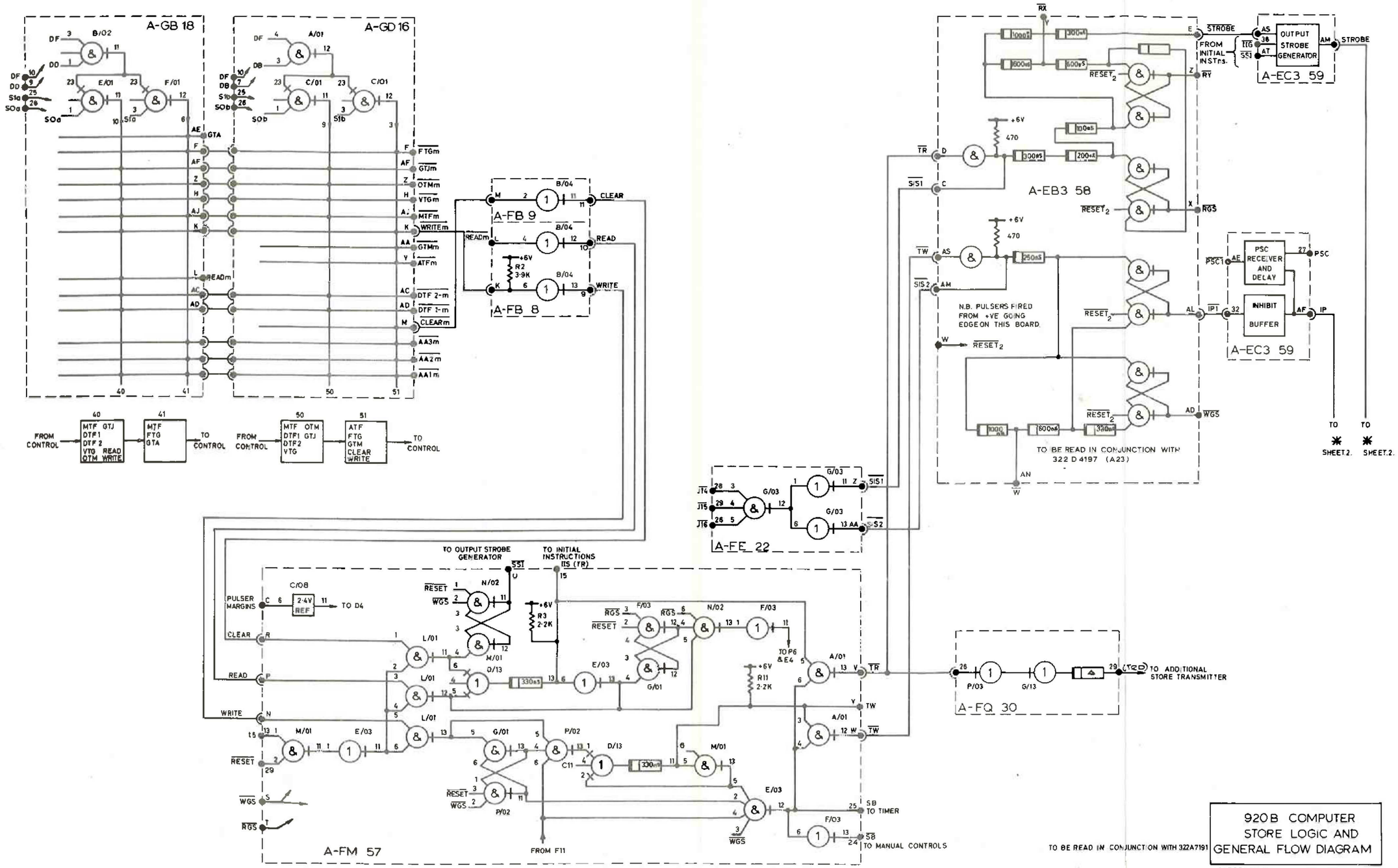

920B COMPUTER STORE LOGIC AND GENERAL FLOW DIAGRAM

SHEET 1 OF 2

A14