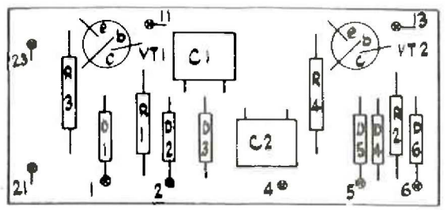

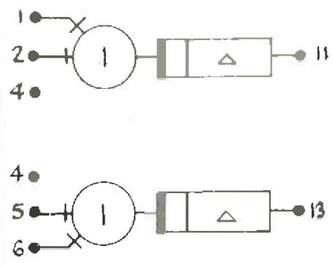

PULSE WIDTH (Δ) = Cns (WHERE C = CAPACITANCE IN pF.)

DIODES ARE PURCH 101
TRANSISTORS ARE PURCH 100

LSA. No.	C_1	C_2
07	100	100
13	330	330
34	100	330

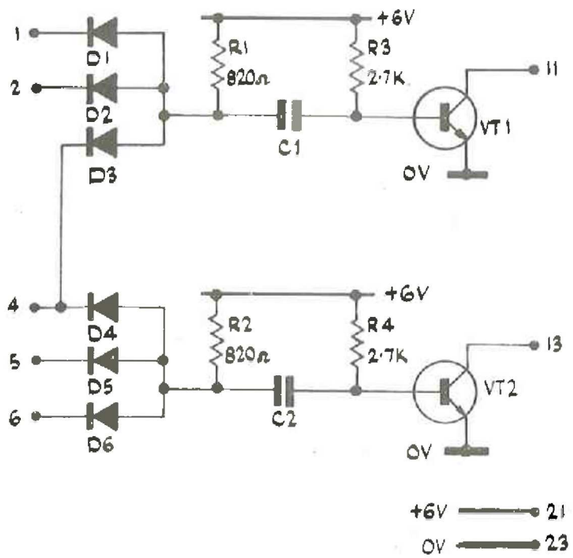

NOTE:-

PULSE WIDTH (+VE). PULSE TRIGGERED BY ANY INPUT REVERTING TO '0' PROVIDING ALL I/P'S HAVE BEEN '1' FOR GREATER THAN 1/2 SEC.

I/P 4.—2·4V. REFERENCE VOLTAGE.

DRAWN C.A.C.	ISSUE No.	1	2	3
CHECKED CS 456	A.R. No	1374	1505	1997
APPROVED	DATE	26·4·66	29·6·66	26·4·67
DATE	INITIALS	C.A.C.	R.W.C.	

ELLIOTT BROTHERS (LONDON) LTD.

TITLE: L.S.A. 07, 13, 34 PULSE GENERATORS 9208

INSTRUCTION SHEET 322A 7191 SHEET No 7 OF

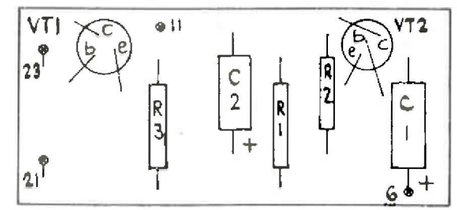

I/P 6 VARIES O/P 11 VOLTAGE FOR MARGINAL TEST.

O/P 11 PROVIDES 2·4V REF.

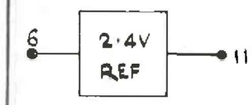

TRANSISTORS ARE MM 2712

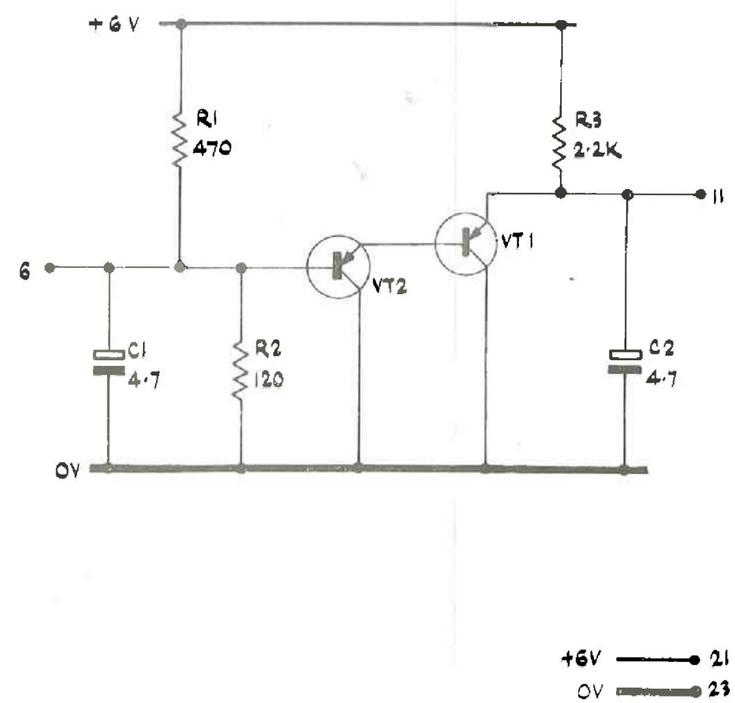

DRAWN C.A.C.	ISSUE No.	1	2	3
CHECKED CS 456	A.R. No	1374	1505	1997
APPROVED	DATE	26·4·66	29·6·66	26·4·67
DATE	INITIALS	C.A.C.	R.W.C.	

ELLIOTT BROTHERS (LONDON) LTD.

TITLE: L.S.A. 08 VOLTAGE REFERENCE 9208

INSTRUCTION SHEET 322A 7191 SHEET No 8 OF