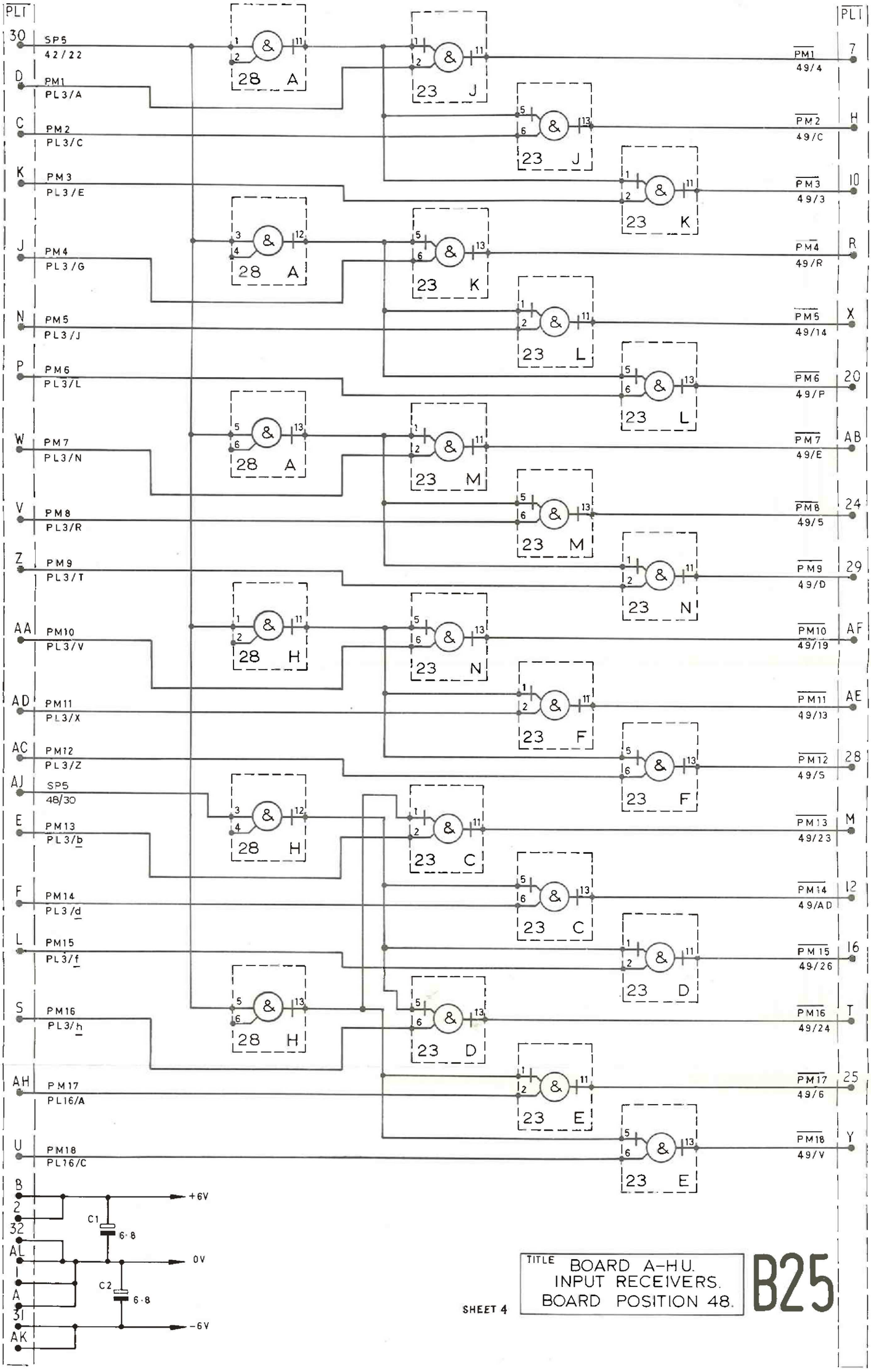
PL1
30 SP5 42/22
D PM1 PL3/A
C PM2 PL3/C
K PM3 PL3/E
J PM4 PL3/G
N PM5 PL3/J
P PM6 PL3/L
W PM7 PL3/N
V PM8 PL3/R
Z PM9 PL3/T
AA PM10 PL3/V
AD PM11 PL3/X
AC PM12 PL3/Z
AJ SP5 48/30
E PM13 PL3/b
F PM14 PL3/d
L PM15 PL3/f
S PM16 PL3/h
AH PM17 PL16/A
U PM18 PL16/C
B
2
32
AL
1
A
31
AK
+6V
C1 6·8
0V
C2 6·8
-6V
28 A
28 A
28 A
28 H
28 H
23 J
23 J
23 K
23 K
23 L
23 L
23 M
23 M
23 N
23 N
23 F
23 F
23 C
23 C
23 D
23 D
23 E
23 E
PM1 49/4
PM2 49/C
PM3 49/3
PM4 49/R
PM5 49/14
PM6 49/P
PM7 49/E
PM8 49/5
PM9 49/D
PM10 49/19
PM11 49/13
PM12 49/S
PM13 49/23
PM14 49/AD
PM15 49/26
PM16 49/24
PM17 49/6
PM18 49/V
PL1
7
H
10
R
X
20
AB
24
29
AF
AE
28
M
12
16
T
25
Y
TITLE BOARD A-H.U. INPUT RECEIVERS. BOARD POSITION 48.
B25
SHEET 4