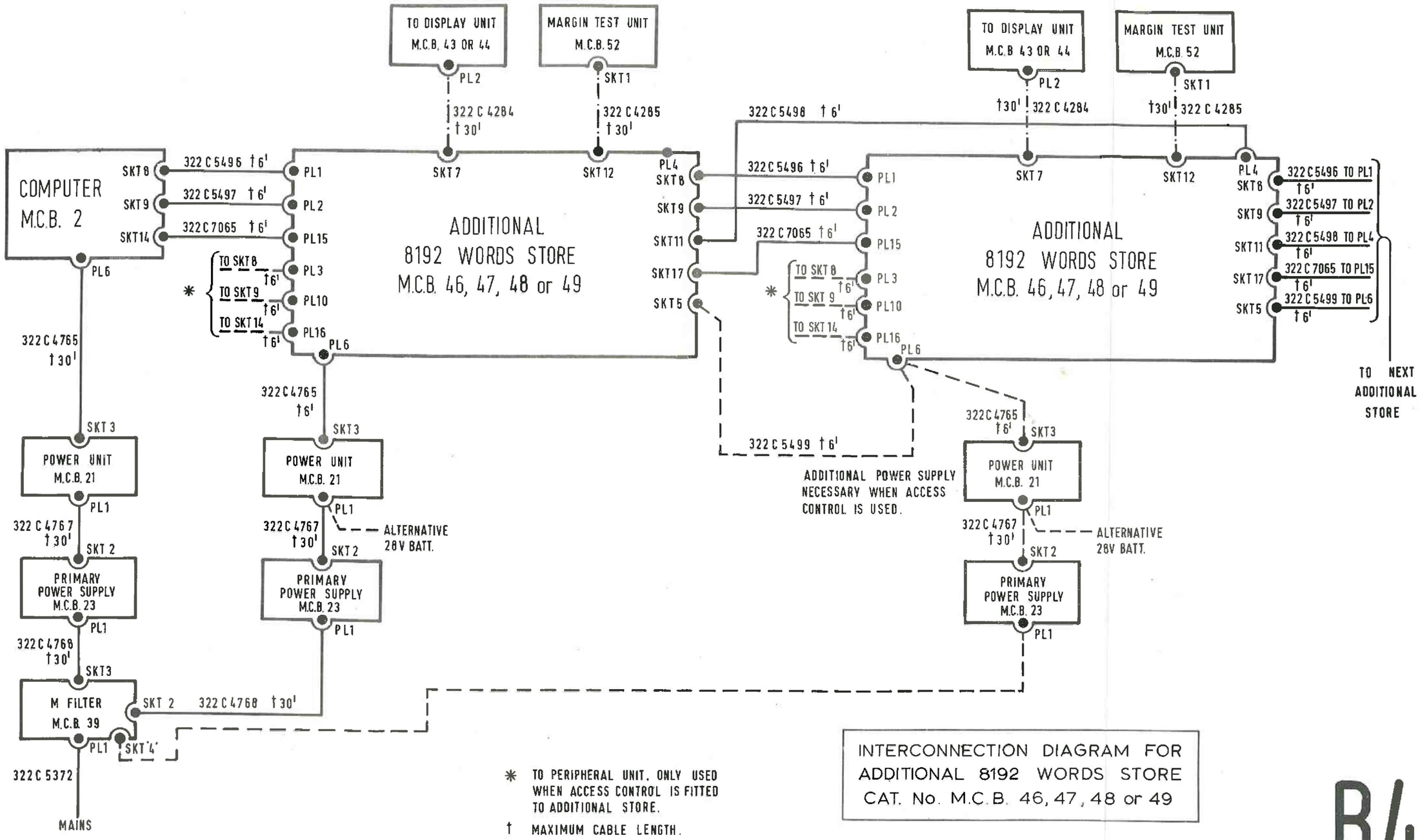

* TO PERIPHERAL UNIT. ONLY USED WHEN ACCESS CONTROL IS FITTED TO ADDITIONAL STORE.

† MAXIMUM CABLE LENGTH.

INTERCONNECTION DIAGRAM FOR ADDITIONAL 8192 WORDS STORE CAT. No. M.C.B. 46, 47, 48 or 49

B4